OSCILADOR TONO
Use instructions

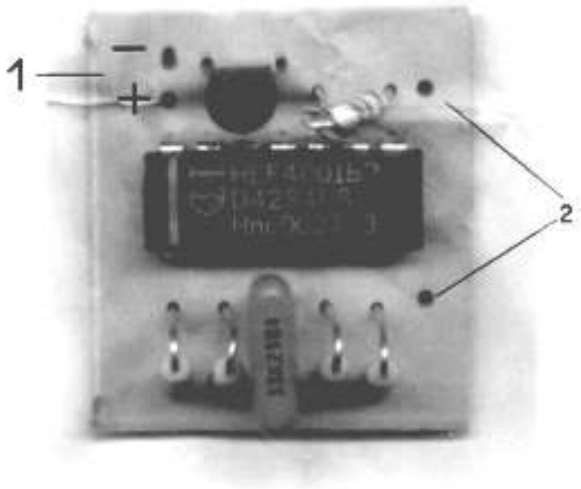

In the point number 1 we will connect the power suplie that can oscillate between 6 and 12 v.dc. although it is recommended to use 9 v.dc so that we obtain a note abaut 750hz.aproximat. In the point 2 will connect the speaker or the exit gives headphones. To connect a morse key we will insert it in the (-).

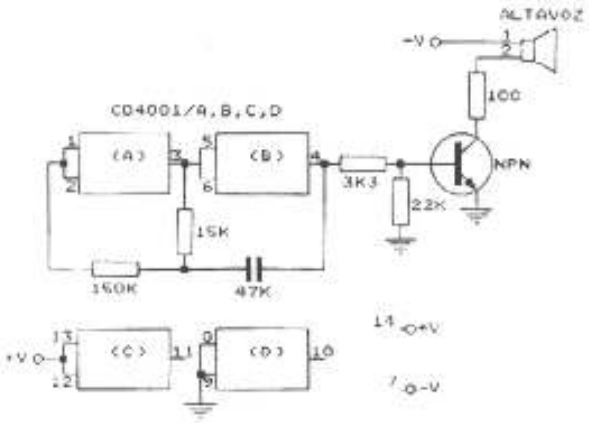

OCILADOR DE TONO